TAKBRO
TELEPHONE: 01623 412 160
E-MAIL: SALES@TAKBRO.CO.UK

REV	DESCRIPTION	DATE
1	RDK-97048	謝琬如 2009/04/09
2	RDK-97127	謝琬如 2009/04/09
3	RDK-98020	謝琬如 2009/04/09
4	RDCM-107015	林淑禎 2018/03/07

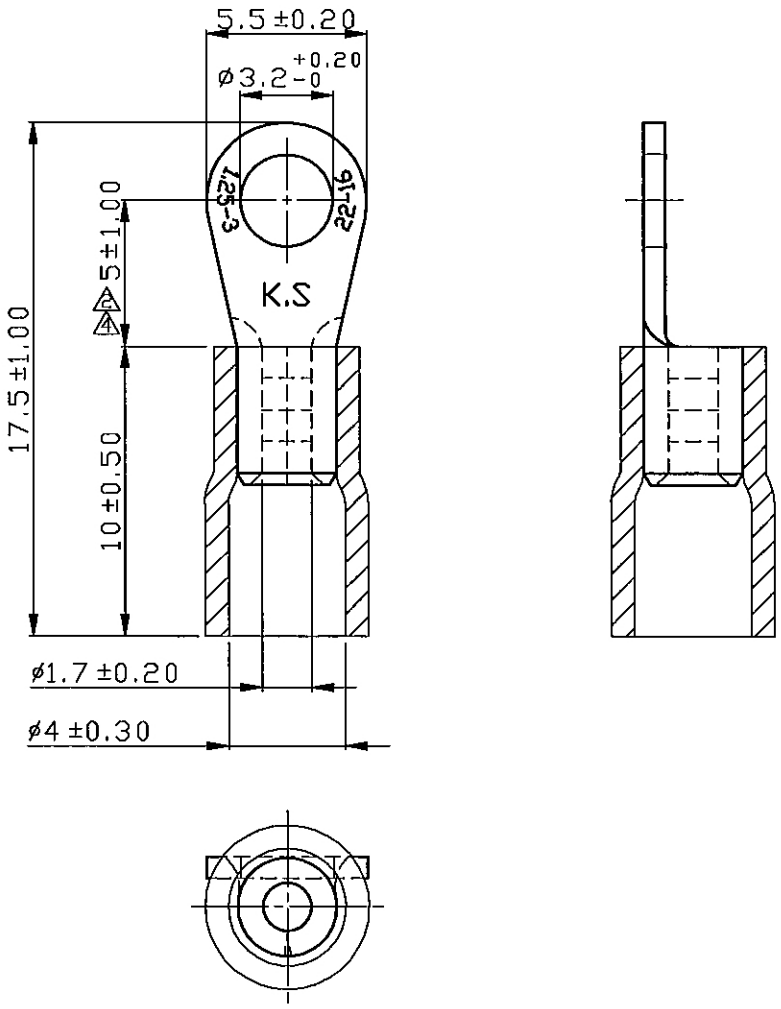

NOTE :

1. MAXIMUM ELECTRIC CURRENT : (1)

A.W.G.	22	20	18	16
AMP.	9	12	17	18

2. MAXIMUM ELECTRICAL RATING : 105°C 600 VOLTS MAX.
3. INSULATION MATERIAL : VINYL
4. INSULATION COLOR : RED
5. TERMINAL MATERIAL : COPPER
6. WIRE RANGE : 22-16 A.W.G. (0.5-1.5 mm^2)
7. TERMINAL SURFACE TREATMENT : TIN PLATED
8. TERMINAL THICKNESS : 0.75 mm

(3) Tolerance Unless Otherwise Specified

0 >	mm ±	ANGLE	
>	mm ±	0°>	° REF ±
>	mm ±	°>	° ±
>	mm ±	°>	° ±

NAME	VINYL-INSULATED RING TERMINALS				UNIT	mm
PART NO.	VR1-3.2	MATERIAL	-------		APPROVE	黃耀先
NUMBER	KA-951071-C	SCALE	REV.	SHEET	CHECKED	柯輝雄
DATE	2006/08/31	4/1	1-4	1OF1	DRAWN	張馨尹